TECHNICAL DESCRIPTION

# Electronics

world skills international

© 2010 WorldSkills International

TD16 v3.0 – WSC2011

WorldSkills International, by a resolution of the Technical Committee and in accordance with the Constitution, the Standing Orders and the Competition Rules, has adopted the following minimum requirements for this skill for the WorldSkills Competition.

The Technical Description consists of the following:


**1. INTRODUCTION ..... 2**

**2. COMPETENCY AND SCOPE OF WORK ..... 2**

**3. THE TEST PROJECT ..... 5**

**4. SKILL MANAGEMENT AND COMMUNICATION ..... 10**

**5. ASSESSMENT ..... 10**

**6. SKILL-SPECIFIC SAFETY REQUIREMENTS ..... 12**

**7. MATERIALS & EQUIPMENT ..... 12**

**8. MARKETING THE SKILL TO VISITORS AND MEDIA ..... 13**


Effective 31.03.10

Liam Corcoran
Technical Committee Chair



Copyright © 2010 WorldSkills International. All rights reserved

# 1. INTRODUCTION

## 1.1 Name and description of skill

1.1.1 The name of the skill is Electronics.

1.1.2 Description of skill
This skill involves manufacturing, testing and troubleshooting electronic equipment. Skilled technicians are able to build equipment and systems for electronics and other special applications. They use the required hand tools, solders and measuring devices and computers. Since the manufacturing processes of modern mass-produced electronics are highly automated, technicians build prototypes before production, and maintain and repair systems.

Computers and embedded systems (computers for which a fixed programming environment is embedded in the processor) play a central role in this skill area since electronic devices are mainly built with the aid of programmed systems.

## 1.2 Scope of application

1.2.1 Every Expert and Competitor must know this Technical Description.

1.2.2 In the event of any conflict within the different languages of the Technical Descriptions, the English version takes precedence.

## 1.3 Associated documents

1.3.1 As this Technical Description contains only skill-specific information it must be used in association with the following:

- WSI - Competition Rules
- WSI - Competition Manual
- WSI - Online resources as indicated in this document
- Host Country - Health and Safety regulations

# 2. COMPETENCY AND SCOPE OF WORK

The Competition is a demonstration and assessment of the competencies associated with this skill. The Test Project consists of practical work only.

## 2.1 Competency specification

General Competency

- Creativity
- Critical thinking
- Honesty and integrity
- Self motivation
- Problem-solving skills
- Work under pressure.
- Able to do environmentally friendly operation


Copyright © 2010 WorldSkills International. All rights reserved

Competency for all modules

- Skills to do measurements in electronic circuits (with DVM, scope, etc)
- Skills to use materials and tools of electronics industry in ordinary servicing, installation and repair tasks (hand tools, different soldering and desoldering technique)
- Knowledge in analysis and design of electric circuit, electronic circuit and digital logic circuit and sensor circuit

Module 1 - Hardware design

- Skills to design small modification to electronic basic electronics blocks
- Skills to draw developed circuit using E-CAD program
- Skill to design of Printed Circuit Board using E-CAD program
- Skill to assembling circuits and Printed Circuit Board into prototype

Module 2 - Measuring and testing module

- Skills to test electronics units, using standard test equipment, and analyze results to evaluate performance and determine need for adjustment.

Module 3 - Fault finding and repair module

- Troubleshooting — determining causes of operating errors and deciding what to do about it.
- Adjust and replace defective or improperly functioning circuitry and electronics components, using hand tools and soldering iron

Module 4 - Embedded Systems Programming module

- Knowledge of circuit boards, processors, chips, electronic equipment, and computer hardware and software.
- Skills and knowledge in programming of embedded systems by using C-language and Integrated Development Environments (ex MPLAB).

Module 5 - Assembly module

- Skill in assembling and utilizing mechanical parts such as DC Motor, Fan Motor, Solenode, bolt, nut, washer and etc
- Skill in wiring and forming cables
- Skill in assembling and using various types of parts and SMD part

## 2.2 Theoretical knowledge

2.2.1 Theoretical knowledge is required but not tested explicitly.
The Competitors' Theoretical knowledge should cover:

**Fundamental electronics principles**

- Basics of AC and DC technology
- Two ports LRC network, resistive networks with up to three meshes
- RC oscillators

**Components in electronics**

Properties, behaviour, characteristics and application (elementary circuits) of mechanically, electrically and physically adjustable components i.e. capacitors, resistors, Coils, transformers and Diodes: rectifying diodes, switch diodes, zener diodes, capacitive diodes, PIN diodes Trigger components, diac, triac, thyristor and Uni. -junction transistors.

**Multistage and special amplifier circuits**

- Basic amplifier circuits (AC, DC and power amplifiers)
- Differential amplifiers/operational amplifiers
- Ideal operational amplifier: (infinite input resistance, zero output resistance and infinite open loop gain) Basic circuits with operational amplifier, analogue adder and sub-tractor, differentiator, comparator, impedance transducer.


Copyright © 2010 WorldSkills International. All rights reserved

- Real operational amplifier: Offset voltage and offset current, compensation, common mode gain and rejection, temperature drift, frequency response.

**Generators and Pulse Shapers**
- Generators for sine wave voltage: RC, quartz, LC oscillators; wien bridge generator, phase generator
- Pulse shaper: Schmitt trigger, differentiator, and integrator.

**Digital Electronics**
- Basic logic gates:
- Level switching function, function table, pulse, diagram, circuit symbols (table in appendix)
- Properties of basic gates AND, OR, NOT, NAND, NOR, EXCLUSIVE OR EXCLUSIVE NOR
- Substituting basic NAND or NOR gates for basic gates.
- Creating switching functions from given circuits and vice versa.
- Making function table from circuit diagrams and switching functions
- Simplifying switching networks using Karnaugh diagram or mathematical techniques.
- Flip-flops, RS Flip-flop, D Flip-flop, JK Master slave Flip-flop (especially counter circuits, shift register and frequency divider).

2.2.2 Knowledge of rules and regulations is not examined.

## 2.3 Practical work

**Assembly module**
The Competitors will be asked to assemble a project from a kit of parts. The standard to be reached is determined by IPC-A-610 issue D (International acceptability of electronic assemblies).

**Measuring and testing module**
The Competitors are expected to work with conventional measuring and testing equipment to test, set, adjust and measure electronic components, modules and equipment that are based in DC, AC, digital and analogue electronics. They are further expected to record and analyse measured results. Boards must be pre-built before the Competition.

**Fault finding and repair module**
The Competitor is expected to locate, test and replace faulty electronic components on a printed circuit board, surface mount board or mixed technology board. All surface mount components to have no more than 20 pins. The Competitor should be able to document fault finding method/procedure with results.

**Hardware design module**
Each Competitor will have to design a PCB. The Host Country selects the software 12 months before the Competition together with the Chief Expert. One of the following must be chosen: Altium, Eagle or Proteus.

Licences of the selected software will be supplied by the sponsor to both the Competitor and the Expert 9 months prior to the Competition. The sponsor will provide support.

This project will be completed in modules over the 4 days of the Competition. Parts of the project may be in progress on days 1, 3 or 4.

**Embedded systems programming module**
The Host country, together with the Chief Expert, produces a processor unit with task module interface 12 months before the Competition. The SW-design project is based on this unit and Competitors do the task paper and project module. See diagram.

Type of processor
PIC: 18F4550
Compiler: C18


Copyright © 2010 WorldSkills International. All rights reserved

A four hour programming module where the chief Expert in conjunction with the host country will confirm any final software arrangements six months before the Competition start date. This is a Software Design; the 18FXX2 processor family shall be used. **The 18F4550** device is to be used (details available at http://www.microchip.com).

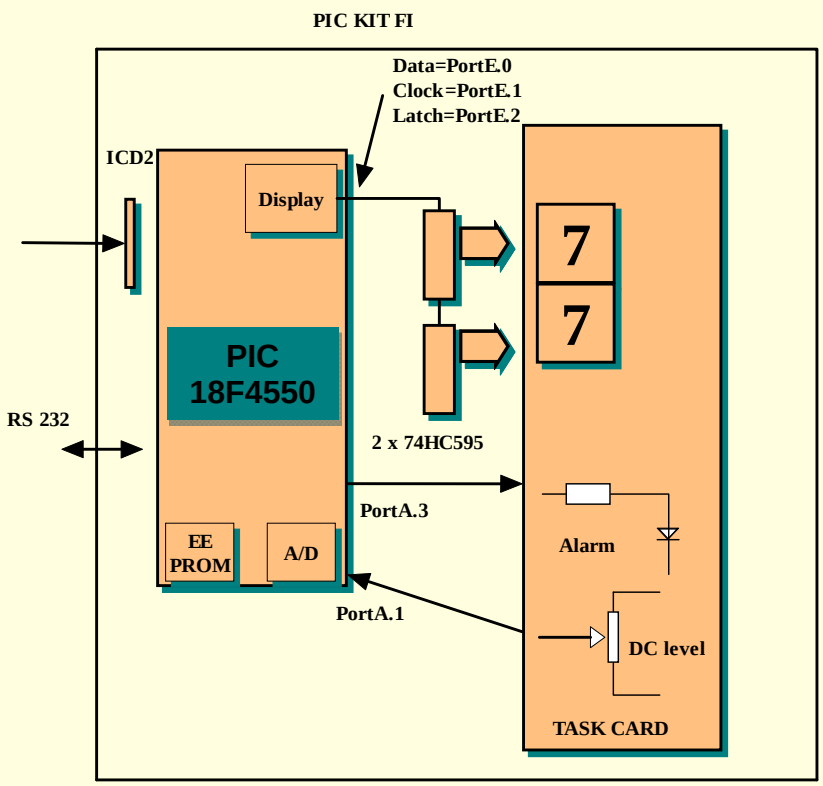


## 3. THE TEST PROJECT

### 3.1 Format / structure of the Test Project

The format of the Test Project is a series of standalone modules.

### 3.2 Test Project design requirements

Experts design modules for evaluation at the Competition according to the following requirements.

**Assembly module**

Experts may bring any projects they desire but the projects should include Assembly of PC boards that include conventional and surface mount Components. Wiring and mechanical assembly may also be required.

It is recommended that:

- 50% of the marks for assembly should be based on components
- 25 % be based on wiring
- 25 % based on mechanical assembly

Surface mount components should have no more than 20 pins. One or two projects may be selected.

The Experts have to supply replacement components for this project. All electronic parts brought to the Competition should be in anti static bags.


Copyright © 2010 WorldSkills International. All rights reserved

**Measuring and testing module**
The boards may be conventional (standard), surface mount technology or mixed technology boards. SMT components may have a maximum of 20 pins.

The Expert is expected to bring one working project demonstration board plus boards for all the Competitors as well as two spare boards, circuit diagrams, component overlays and data.

**Fault finding and repair module**
The Experts are expected to supply replacement components for this project. All boards must be pre-built before the Competition. Each board must have at least three faults. All Experts will bring one working project demonstration board, for the Competitors plus two spare boards; electronic circuit diagrams component overlays and data sheets. All electronic parts brought to the Competition should be in anti static bags. Integrated Circuits to be brought in anti static boxes inserted in anti static foam

**Hardware design module**
The final solution to this must include circuit design or modifications to pre-built, or partially built board(s) and include test points as part of their design.

In this project the Competitor needs to create a solution defined in the assignment to meet the properties in a given environment in hardware using a breadboard to prove the design which they must bring with them.

The Experts responsible will supply a complete set of circuit specifications, schematic diagrams, and a list of suggested components. The Experts will also bring materials from which PC boards may be constructed.

Once the design has been proven, each Competitor will have to design a PCB. Circuit design is separate and PBC-design starts from original and right version, same for all)

6 month before the Competition
Provide the Design Rules Document on the Discussion Forum. This document will explain exactly what data is needed at the end of PCB Design Module.

This will then be manufactured on the Competition stand by the Host Country for the afternoon of day three of the event.

It is recommended that the Altium Software will be used. (*WorldSkills International will circulate six months prior to the Competition start date what version will be used*) This will then be manufactured on the Competition stand by the Host Country for the afternoon of day three of the event.

This project shall include assembly skills, that are hand assembly skills not computer assembly programming. The Software Development Plan and Hardware Development Plan boards can contain analogue, digital and embedded components, or a mixture of such components.

Each Expert to bring one working project demonstration board for the Competitors plus two spare boards, circuit diagrams, component overlays as well as data sheets. All electronic parts brought to the Competition should be in anti static bags. Integrated Circuits to be brought in anti static boxes inserted in anti static foam.


Copyright © 2010 WorldSkills International. All rights reserved

## Embedded systems programming module

A four hour programming module where the chief Expert in conjunction with the host country will confirm any final software arrangements six months before the Competition start date. This is a Software Design; the 18FXX2 processor family shall be used. The 18F4520 device is to be used (details available at http://www.microchip.com).

The program will be in C only The C compiler must be brought by the Competitor and the one recommended is the one supplied by Microchip.

The C Programming marking system functionality will include the following:

Use of Interrupts: Interrupt Subroutines (ISR) are allowed. Use of priority is allowed. In Line Assembly: This is NOT allowed, the only exception being as follows: -

The use of commented sections of code that are not editable, that is the Competitor does not need to change any assembly code. The comments should be adequate to understand the function of the code without knowing the detail of the mnemonics.

## Time allowed for each module

| Module | Time allowed | Suggested Day |
|---|---|---|
| Hardware design | 6 hours | C1 and C4 |
| Embedded systems programming | 4 hours | C2 |
| Fault finding and repair | 4 hours | C2 and C3 |
| Measuring and testing | 4 hours | C2 and C3 |
| Assembly project | 4 hours | C4 |

## General notes on proposed modules

Each proposal must:

- Meet the Test Project design requirements
- Have a minimum number of words
- Be able to be translated quickly into the mother tongue of the Competitor
- Have a small project brief
- Have a parts list
- Have a circuit diagram
- Have a data sheet pack

Project documentation must be brought to the Competition on CD Rom, DVD Rom or Memory Stick in Microsoft Word. When preparing the project no more than 200 words should be used in any one project. All words are to be double spaced underneath to allow for translation into the mother tongue of the Competitors. Each Expert should also allow 25% space on each sheet for drawing modifications.

Where Experts have used drawing software, Experts should bring along the version of the drawing program software that they used. Paper copies should also be presented and where possible in three official languages. Where possible, circuit diagrams, photographs, line drawings, etc. will be used for all modules and project wording should be as brief as possible.

## Specifications for Test project modules

All test project modules must be according following specifications (possible data lines and voltages, 5 V, 12 V).

There is no DIN connector.
Voltages are ±12V.


Copyright © 2010 WorldSkills International. All rights reserved

## 3.3 Test Project development

The Test Project MUST be submitted using the templates provided by WorldSkills International (http://www.worldskills.org/Competitionpreparation). Use the Word template for text documents and DWG template for drawings.

### 3.3.1 Who develops the Test Project / modules

The Test Project / modules are developed by:
The Test Project/modules are developed for the 2011 Competition by Experts according to the table below:

| Country | Assembly module | Fault finding and repair module | Measuring and testing module | Embedded systems programming module | Hardware design module |
|---|---|---|---|---|---|
| Brazil | | X | | | X |
| Canada | | | X | | |
| Finland | | X | | X | |
| Germany | | | | | X |
| Japan | | X | | X | |
| Korea | X | | | | X |
| Ireland | | X | | | |
| Indonesia | X | | X | | |
| Morocco | | X | | | X |
| Iran | | X | | | |
| Singapore | | X | | | X |
| Switzerland | | | X | | |
| Taiwan | | X | | X | |
| Tunisia | | | X | | X |
| Vietnam | | X | | X | |
| United Kingdom | X | | | | |

Experts entering for the first time must contact the Chief Expert to discuss what projects they must bring at least three months before the Competition.

All modules must use a 12 volt plus or minus supply that will be supplied by the host country.

### 3.3.2 How and where is the Test Project / modules developed

The Test Project/modules are developed independently.

### 3.3.3 When is the Test Project developed

The Test Project/modules are developed according to the timeline below:

| Time | Activity |
|---|---|
| At the previous Competition | Experts decide on the modules for the next Competition then they select which modules they would like to develop. This process is controlled by the Chief Expert. |
| 6 months before the Competition | New Experts contact the Chief Expert for allocation of module proposals. |
| 2 months before the Competition | Experts send all all library references and other support material to Chief Expert for circulation to all competing countries/regions. |
| At the Competition | Modules are selected by voting process described in section 2.9 |
| At the Competition | A random ballot selection is used to determine the allocation of workbenches to Competitors. |


Copyright © 2010 WorldSkills International. All rights reserved

**3.4 Test Project marking scheme**

Each Test Project must be accompanied by a marking scheme proposal based on the assessment criteria defined in Section 5.

3.4.1 The marking scheme proposal is developed by the person(s) developing the Test Project. The detailed and final marking scheme is developed and agreed by all Experts at the Competition.

3.4.2 Marking schemes should be entered into the CIS prior to the Competition.

**3.5 Test Project validation**

Experts will validate the Test Project together at the Competition. An agreement will be made that the following criteria is met.

- Test project should meet the description of 2.3 Practical work and 3.2 Test Project design requirements.
- Time limit – time for each module is open depending on the total time of the Competition.
  - Hardware Design Project
  - Embedded Systems Programming
  - Fault Finding and Repair project (2 projects)
  - Measuring and testing project
  - Assembly project

**3.6 Test Project selection**

The Test Project is selected as follows:

The Test Project is selected by vote of Experts at the current Competition using the voting process described below.

**Voting process**

- First, vote for the project most appropriate for the skill description. Rank and give them a point.
- Second, vote for projects considering their level of difficulty and freshness of idea. Choose two projects you consider the best and the second in one vote.
- Then rank and give them a point
- The two projects which have the highest and the second highest total points in votes 1 and 2 will be selected

| Rank Point | Vote 1 | Vote 2 | Vote 3 |
|---|---|---|---|
| 1st | | | |
| 2nd | | | |
| 3rd | | | |
| 4th | | | |
| 5th | | | |
| Others | | | |

**3.7 Test Project circulation**

The Test Project is not circulated

**3.8 Test Project coordination (preparation for Competition)**

Coordination of the Test Project will be undertaken by the Chief Expert.

**3.9 Test Project change at the Competition**

Not applicable.

**3.10 Material or manufacturer specifications**

Material and manufacturer specifications for Test Projects set by each Expert should be updated on the Industrial Electronics forum by one month prior to the Competition. The information can be provided by uploading the full datasheet of main materials (IC, special parts, etc). The Expert who prepared the Embedded Systems Programming module should present a newly written library or special function.


Copyright © 2010 WorldSkills International. All rights reserved

## 4. SKILL MANAGEMENT AND COMMUNICATION

### 4.1 Discussion Forum

Prior to the Competition, all discussion, communication, collaboration and decision making regarding the skill must take place on the skill-specific Discussion Forum (http://www.worldskills.org/forums). All skill-related decisions and communication are only valid if they take place on the forum. The Chief Expert (or an Expert nominated by the Chief Expert) will be moderator for this forum. Refer to Competition Rules for the timeline of communication and Competition development requirements.

### 4.2 Competitor information

All information for registered Competitors is available from the Competitor Centre (http://www.worldskills.org/competitorcentre).

This information includes:

- Competition Rules
- Technical Descriptions
- Test Projects
- Other Competition-related information

### 4.3 Test Projects

Circulated Test Projects will be available from worldskills.org (http://www.worldskills.org/testprojects) and the Competitor Centre (http://www.worldskills.org/competitorcentre).

### 4.4 Day-to-day management

The day-to-day management is defined in the Skill Management Plan that is created by the Skill Management Team led by the Chief Expert. The Skill Management Team comprises the Jury President, Chief Expert and Deputy Chief Expert. The Skill Management Plan is progressively developed in the six months prior to the Competition and finalised at the Competition (agreed by Experts and submitted to the Chair/Vice Chair of the Technical Committee). The Chief Expert is to regularly share updates of the Skill Management Plan via the Forum.

## 5. ASSESSMENT

This section describes how the Experts will assess the Test Project / modules. It also specifies the assessment specifications and procedures and requirements for marking.

### 5.1 Assessment criteria

This section defines the assessment criteria and the number of marks (subjective and objective) awarded. The total number of marks for all assessment criteria must be 100.

| Section | Criterion | Marks | | |
|---|---|---|---|---|
| | | Subjective (if applicable) | Objective | Total |
| A | Hardware design | | 25 | 25 |
| B | Embedded systems programming | | 20 | 20 |
| C | Fault finding and repair | | 20 | 20 |
| D | Measuring and testing | | 20 | 20 |
| E | Assembly module | | 15 | 15 |
| | **Total =** | | 100 | **100** |

### 5.2 Subjective marking

Not applicable.


Copyright © 2010 WorldSkills International. All rights reserved

## 5.3 Skill assessment specification

Specific marking criteria for each project differ. However, major marking features for each project are as follows.

A. Hardware design module - 25 marks
Development of given basic circuit - 10 marks
Design of PCB-board layout - 7 marks
Assembling of design unit according ICP-A-610 D - 3 marks
Functionality of proto unit - 5 marks

B. Embedded Systems Programming - 20 marks
Software functionality - 20 marks

C. Fault finding and repair module - 20 marks
Finding faulty spots - 10 marks
Description of fault symptoms - 5 marks
Repair process (IPC-A-610-D) and methods - 5 marks

D. Measuring and testing module - 20 marks
Validity of measuring results - 10 marks
Documentation of measuring method – 10 marks

E. Assembly module - 15 marks
Operating condition OK - 8 marks
Assembled quality according ICP-A-610 D - 7 marks

## 5.4 Skill assessment procedures

Each Expert joins the Competition with a formerly allocated Test Project. The Test Project that will be used at the Competition is selected 3 days before the first Competition day.

The process of selecting Test Projects is as follows:

- The Expert who prepared a Test Project explains his/hers to all Experts.
- All Experts vote to decide the Test Projects.

Each Test Project is to be made based on section 3 *The Test Project,* however the contents in the prepared project can differ according to the project provider's intention.

Assessment procedure and detailed marking standard can be determined as below:

- Forming assessment group for each project
  - Survey every Expert's preference for marking which project
  - Chief Expert allocates 4 to 5 Experts for each project, considering the survey result
  - Each group selects its own group leader
- The project provider proposes the outline of marking standard to the project marking group
- All the Experts in each group confirm the final marking standard referring to the initial outline
- Each assessment group is responsible for the progress of the pertaining Test Project

Experts start marking after the end of each module. Each Expert marking group can organize the marking schedule after consultation with the Chief Expert.

Assessment is completed each day. All assessments are done when the last module's assessment is completed.

Only the Expert marking group for a specific module assesses the module. All other Experts can leave the Competition site. Modules are assessment in the Expert room.


Copyright © 2010 WorldSkills International. All rights reserved

## 6. SKILL-SPECIFIC SAFETY REQUIREMENTS

Refer to Host Country Health & Safety documentation for Host Country regulations.
Skill-specific safety requirements:

- All Competitors and Experts must have Electro Static Awareness (ESD)

## 7. MATERIALS & EQUIPMENT

### 7.1 Infrastructure List

The Infrastructure List lists all equipment, materials and facilities provided by the Host Country.

The Infrastructure List is online (http://www.worldskills.org/infrastructure/).

The Infrastructure List specifies the items & quantities requested by the Experts for the next Competition. The Host Country will progressively update the Infrastructure List specifying the actual quantity, type, brand/model of the items. Host Country supplied items are shown in a separate column.

At each Competition, the Experts must review and update the Infrastructure List in preparation for the next Competition. Experts must advise the Technical Director of any increases in space and/or equipment.

At each Competition, the Technical Observer must audit the Infrastructure List that was used at that Competition.

The Infrastructure List does not include items that Competitors and/or Experts are required to bring and items that Competitors are not allowed to bring – they are specified below.

Note: Desktop computers are not required to be supplied by the Host country because Competitors will provide their own laptops for use during the Competition.

### 7.2 Materials, equipment and tools supplied by Competitors in their toolbox

Laptop Computers with English Language, USB Ports, Embedded System kit with a standard interface. Hand tools and soldering stations are required, however they may bring all there own equipment plus step transformers.

### 7.3 Materials, equipment and tools supplied by Experts

Laptop Computers, USB Ports. Hand tools and soldering stations are required, however they may bring all there own equipment plus step transformers.

### 7.4 Materials & equipment prohibited in the skill area

Not applicable


Copyright © 2010 WorldSkills International. All rights reserved

### 7.5 Sample workshop layouts

Workshop layouts from Calgary are available at:
http://www.worldskills.org/index.php?option=com_halls&Itemid=540

Workshop layout from previous Competition:

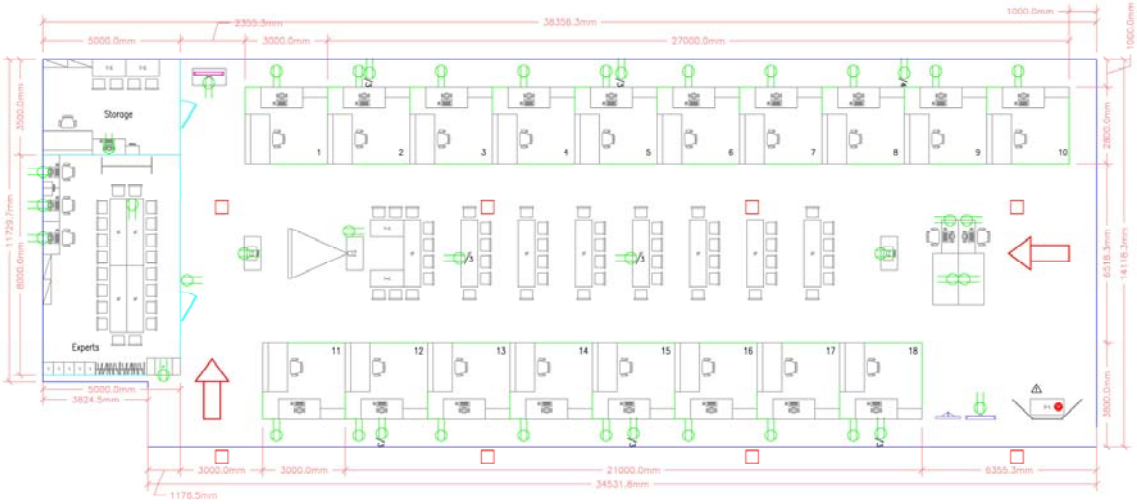


## 8. MARKETING THE SKILL TO VISITORS AND MEDIA

### 8.1 Maximising visitor and media engagement

Following is a list of possible ideas to maximise visitor and media engagement:

- Try a trade
- Display screens
- Test Project descriptions
- Enhanced understanding of Competitor activity
- Competitor profiles
- Career opportunities
- Daily reporting of Competition status

### 8.2 Sustainability

- Recycling
- Use of ‘green’ materials – Pb-free lead is used for soldering


Copyright © 2010 WorldSkills International. All rights reserved